HATTELAND® TECHNOLOGY
an EMBRON Company

Marine certified joystick and mouse

ENX CST100N8-2048

Panel Mount PTZ LED red

Specifications

- Joystick acts as both mouse and joystick
- Easy to switch between the different protocols, just one click with the button on the top of the joystick
- USB Interface
- Panel mount and desktop option (desktop model)
- IEC 60945 approved
- Excellent for CCTV, controls everything with one joystick

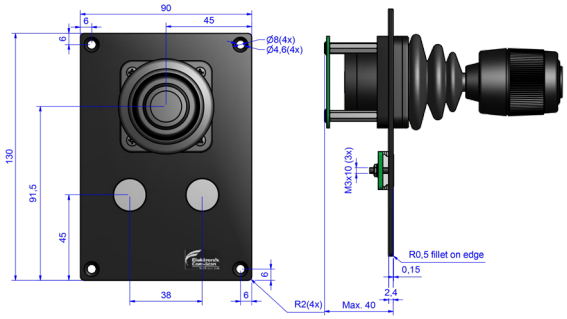

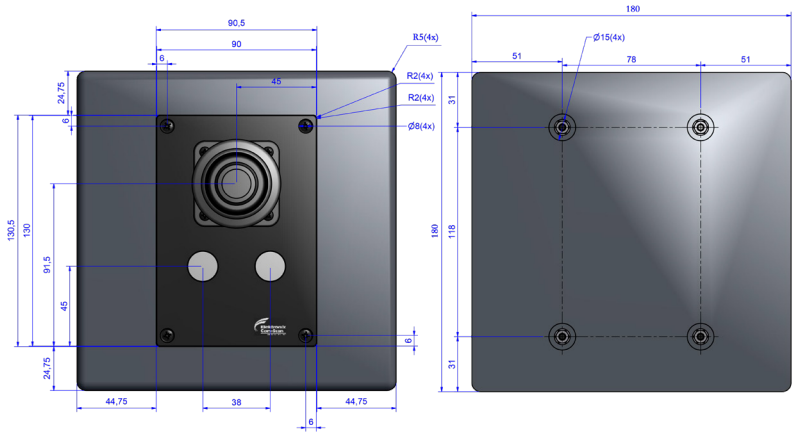

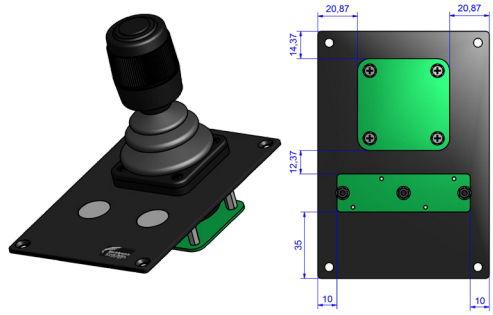

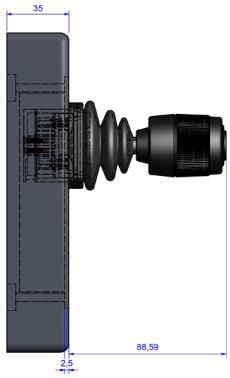

Hatteland Technology AS Strandveien 35, 1366 Lysaker Norway
Tel: + 47 67 58 77 70 e-mail: sales@hattelandtechnology.com www.hattelandtechnology.com